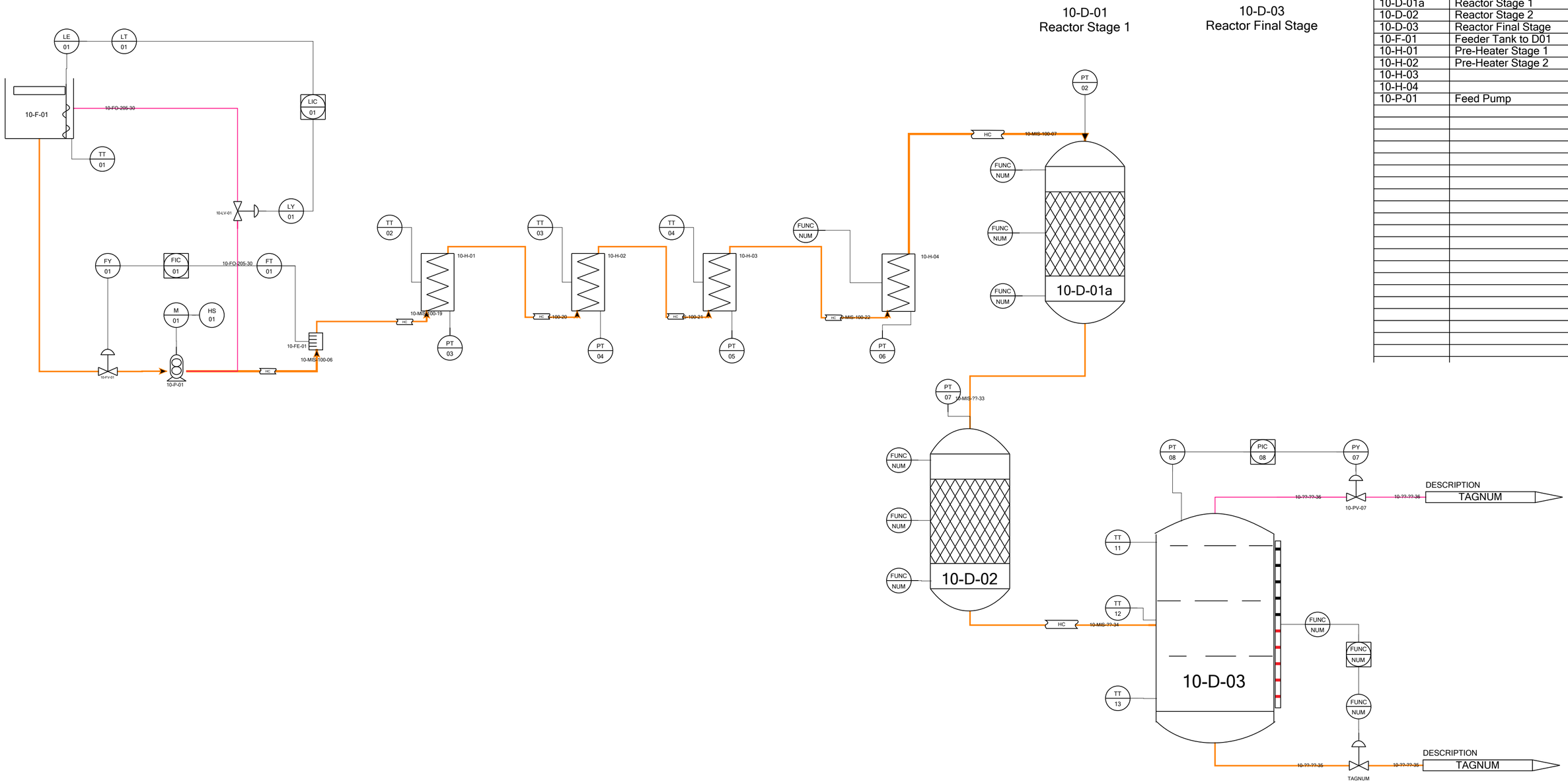

TAG NO.	DESCRIPTION
10-D-01a	Reactor Stage 1
10-D-02	Reactor Stage 2
10-D-03	Reactor Final Stage
10-F-01	Feeder Tank to D01
10-H-01	Pre-Heater Stage 1
10-H-02	Pre-Heater Stage 2
10-H-03	
10-H-04	
10-P-01	Feed Pump

REV	DATE	DESCRIPTION	BY
00	00/2008	Test Rev	TK

Client Logo
1Des
Design Software

TITLE
P&ID Example Project
Reaction Plant

CLIENT		
PROC ENG.		
PROJ MAN.		
CHECKED		
DRAWN		
APPROVAL	SIGNATURE	DATE

DRAWING NUMBER

DGM REF

REVISION	SIZE	SCALE
00	A2	N.T.S